[ Special Series ]

# Haas Bar Feeder

## The Automatic Bar Feeder

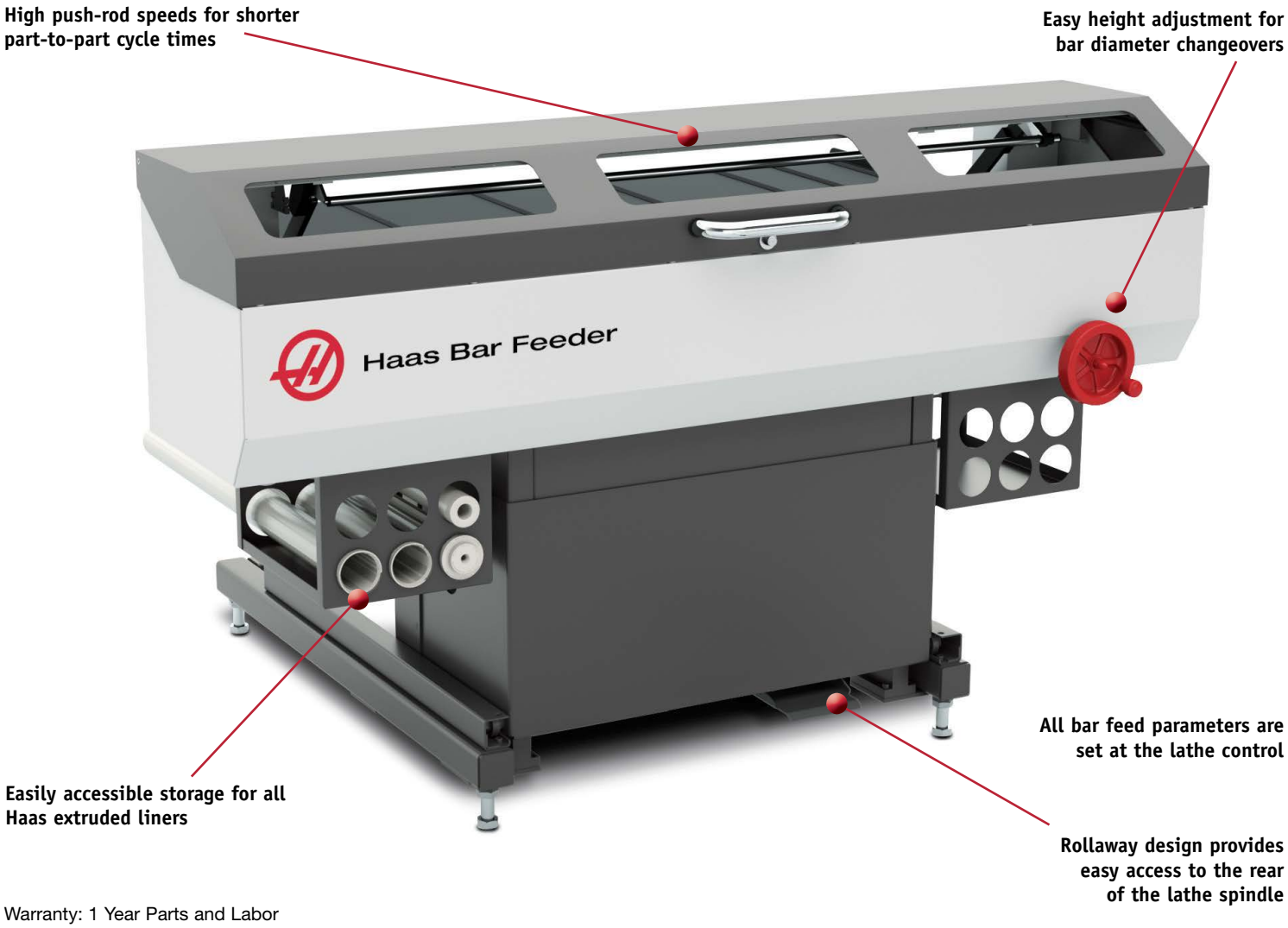


Warranty: 1 Year Parts and Labor

### [ Standard Features ]

- Rollaway design for easy access to the rear of the lathe spindle
- High push-rod speeds for shorter part-to-part cycle times
- Ability to use the pushrod as a stop
- Improved mechanical design for increased reliability and performance
- Easy bar diameter changeover (height adjustment), with better ergonomics
- Quick-change pushrod design, with no tools needed
- Storage for 3/8" (9.5 mm) and 3/4" (20 mm) pushrod diameters
- Easily accessible storage for all Haas extruded liners



Specifications subject to change without notice. Not responsible for typographical errors. Machine shown with optional equipment. Product appearance may differ.

# Haas Bar Feeder

## The Automatic Bar Feeder

The Haas Bar Feeder provides a simple efficient, and affordable way to automate part production on Haas turning centers. It features a heavy-duty, compact design that boosts productivity and streamlines turning operations.

Designed and built for use with Haas ST-10 through ST-35 and DS series CNC turning centers, the Haas Bar Feeder connects directly to the Haas control. Unique rollaway design provides easy access to the rear of the lathe spindle for quick liner adapter and liner changes.

*Note: Requires anchoring to the floor to use the rollaway feature. Requires the purchase of an installation kit specific to the Haas CNC turning center it will be connected to. Not compatible with any gear-drive spindle option on the ST-30 or ST-35. Requires software version 11.21A or later.*

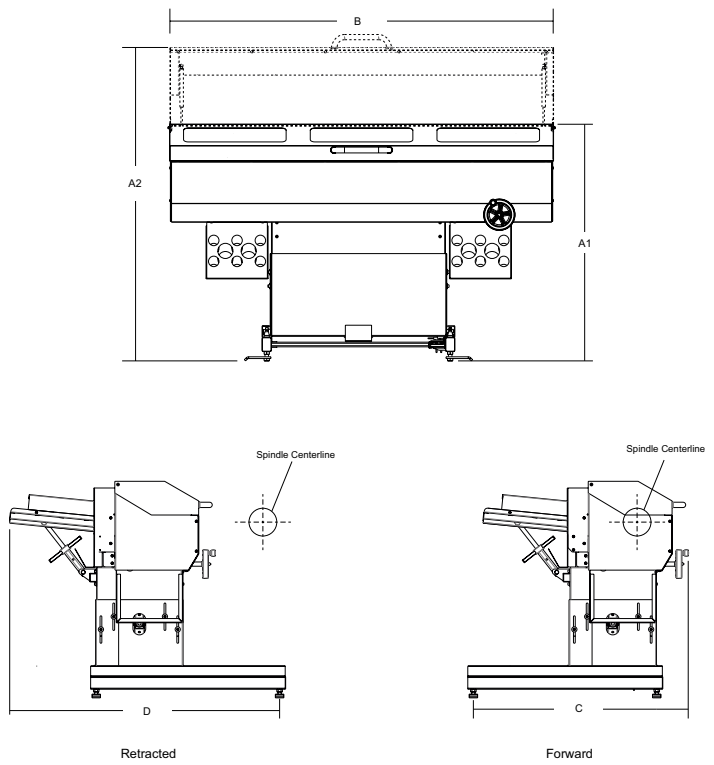


| Operating Dimensions | w/ ST-10/15 | w/ ST-20/25 | w/ ST-30/35/DS-30 |
|---|---|---|---|
| A1. Max Operating Height, Closed | 49.25" 1 251 mm | 48.5" 1 232 | 53" 1 346 mm |
| A2. Max Operating Height, Open | 69.75" 1 772 mm | 69.0" 1 753 | 73.5" 1 867 mm |
| B. Max Operating Width | | | 83.1" 2 111 mm |
| C. Max Operating Depth, Forward | | | 50.9" 1 293 mm |
| D. Max Operating Depth, Retracted | | | 57.5" 1 461 mm |

## [ Specifications ]

| | |
|---|---|
| **Bar Capacities** | |
| Bar Diameter Range[1] | 0.375" to 3.125"<br>9.5 to 79.4 mm |
| Bar Length Capacity | 48"<br>1219 mm |
| Recommended Max Bar Length in Spindle[2] | 48"<br>1 219 mm |
| Minimum Bar Length | 15"<br>381 mm |
| **Charging Tray** | |
| Max Number of Bars on Charger Tray | up to 30" depth<br>up to 762 mm depth |
| Max Total Weight of Bars | 650 lb<br>295 kg |
| **Max Bar Weight Capacity** | |
| Lift Arm Max Weight Limit | 80 lb<br>36 kg |
| **Accuracy** | |
| Positioning Without Deadstop[3] | ±0.01"<br>±0.25 mm |
| **General** | |
| Interface | Directly to the Haas Control |
| Power Requirement | Connects directly to the lathe electrical cabinet |
| Weight | 900 lb<br>408 kg |

[1]Max bar diameter is determined by the bar capacity of the lathe, but not to exceed 3.125" (79.4 mm).

[2]It is recommended that the maximum length of bar in the spindle does not exceed the length of the spindle liner and adapter combination.

[3]With recommended pull-back-type collet.

Made in the USA

ISO 9001:2008 CERTIFIED

Specifications subject to change without notice.
Machine shown with optional equipment. Product appearance may differ.
Not responsible for typographical errors.

Sept 2015